JB33

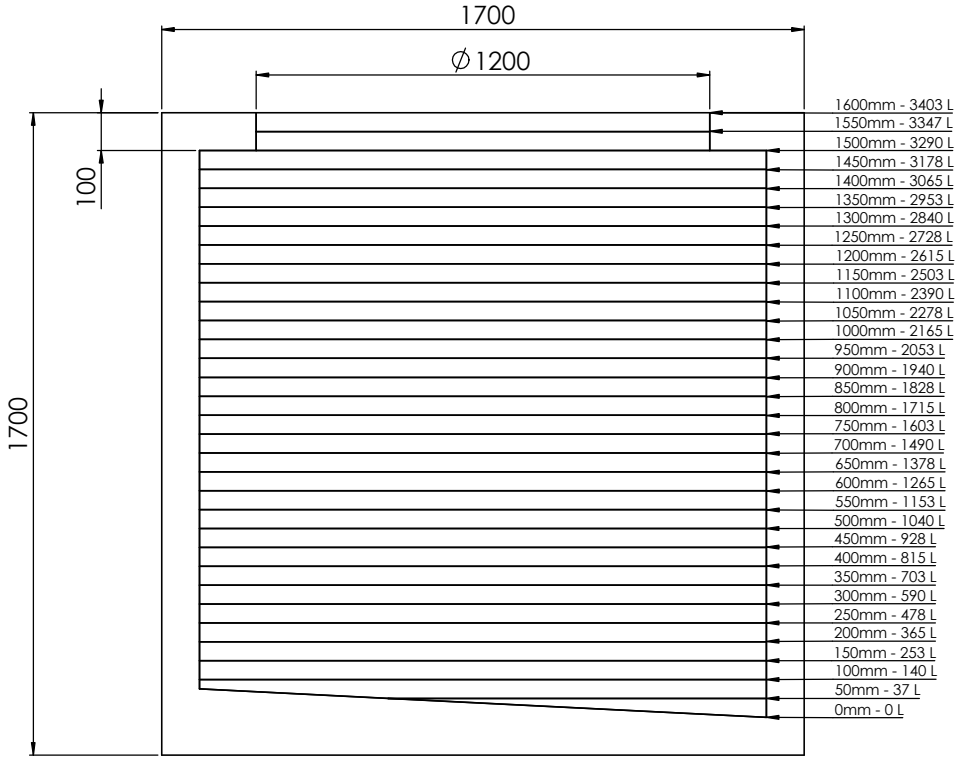
1700
∅1200
100
1700
1600mm - 3403 L
1550mm - 3347 L
1500mm - 3290 L
1450mm - 3178 L
1400mm - 3065 L
1350mm - 2953 L
1300mm - 2840 L
1250mm - 2728 L
1200mm - 2615 L
1150mm - 2503 L
1100mm - 2390 L
1050mm - 2278 L
1000mm - 2165 L
950mm - 2053 L
900mm - 1940 L
850mm - 1828 L
800mm - 1715 L
750mm - 1603 L
700mm - 1490 L
650mm - 1378 L
600mm - 1265 L
550mm - 1153 L
500mm - 1040 L
450mm - 928 L
400mm - 815 L
350mm - 703 L
300mm - 590 L
250mm - 478 L
200mm - 365 L
150mm - 253 L
100mm - 140 L
50mm - 37 L
0mm - 0 L

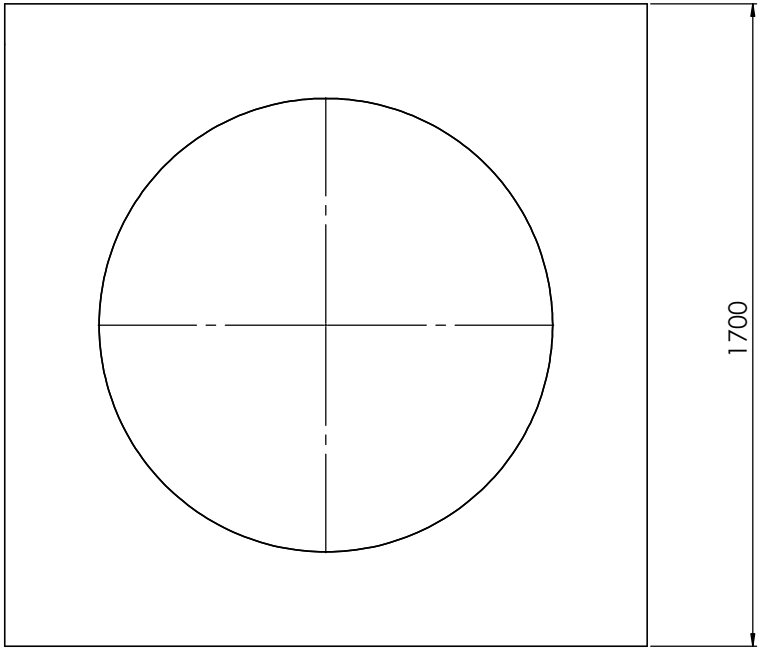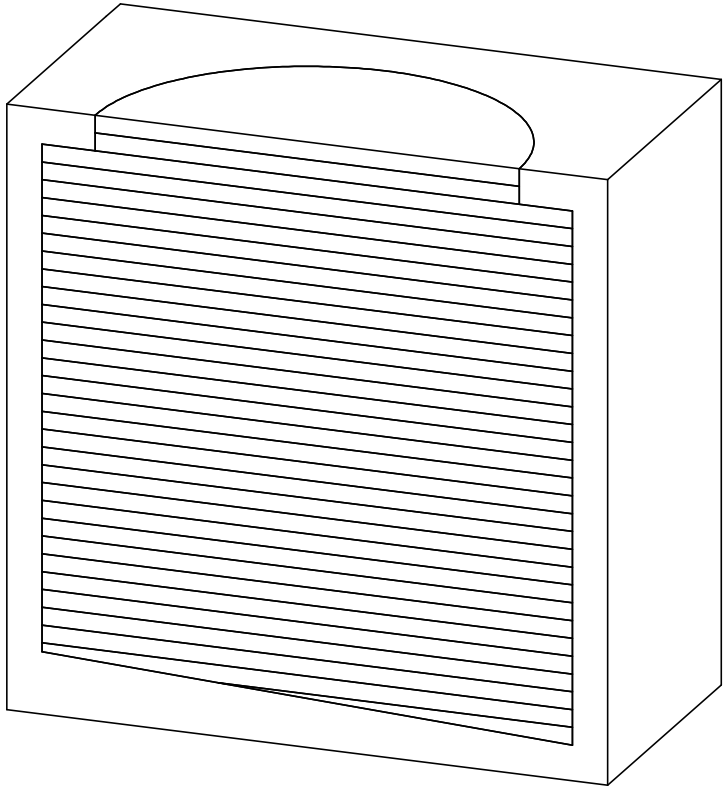
1700