JB45

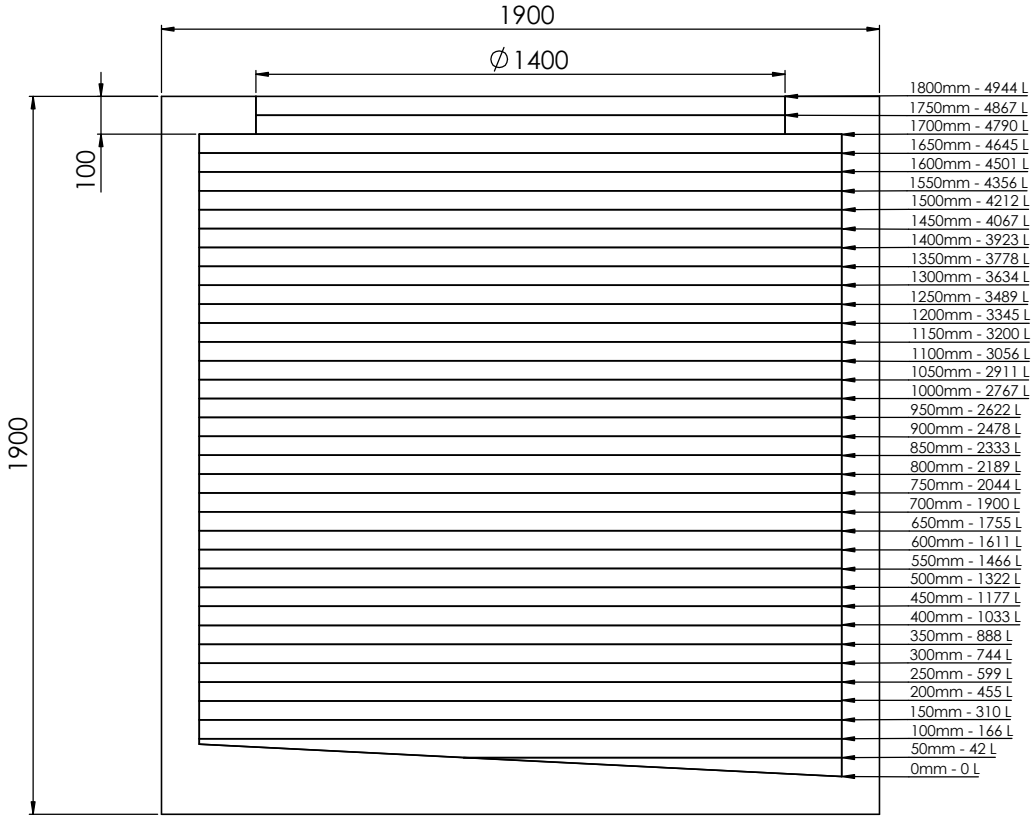
1900
∅1400
100
1900
1800mm - 4944 L
1750mm - 4867 L
1700mm - 4790 L
1650mm - 4645 L
1600mm - 4501 L
1550mm - 4356 L
1500mm - 4212 L
1450mm - 4067 L
1400mm - 3923 L
1350mm - 3778 L
1300mm - 3634 L
1250mm - 3489 L
1200mm - 3345 L
1150mm - 3200 L
1100mm - 3056 L
1050mm - 2911 L
1000mm - 2767 L
950mm - 2622 L
900mm - 2478 L
850mm - 2333 L
800mm - 2189 L
750mm - 2044 L
700mm - 1900 L
650mm - 1755 L
600mm - 1611 L
550mm - 1466 L
500mm - 1322 L
450mm - 1177 L
400mm - 1033 L
350mm - 888 L
300mm - 744 L
250mm - 599 L
200mm - 455 L
150mm - 310 L
100mm - 166 L
50mm - 42 L
0mm - 0 L

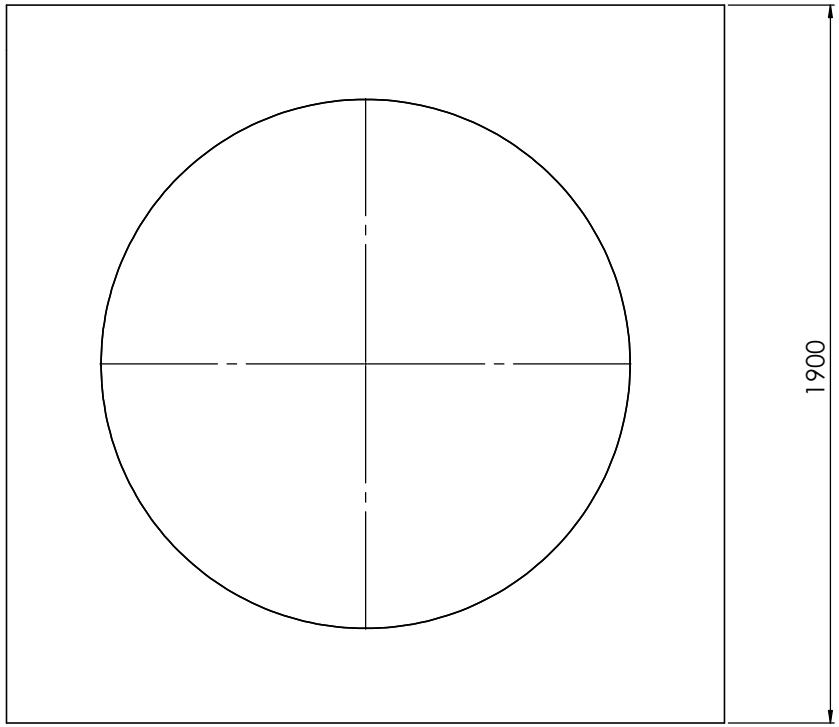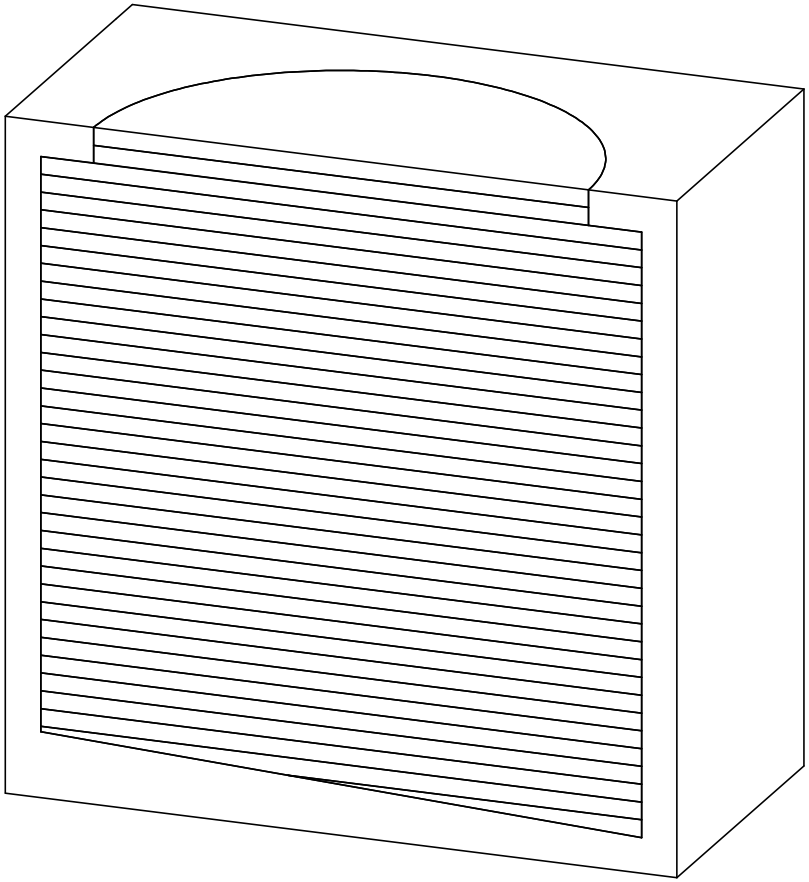
1900