JB58

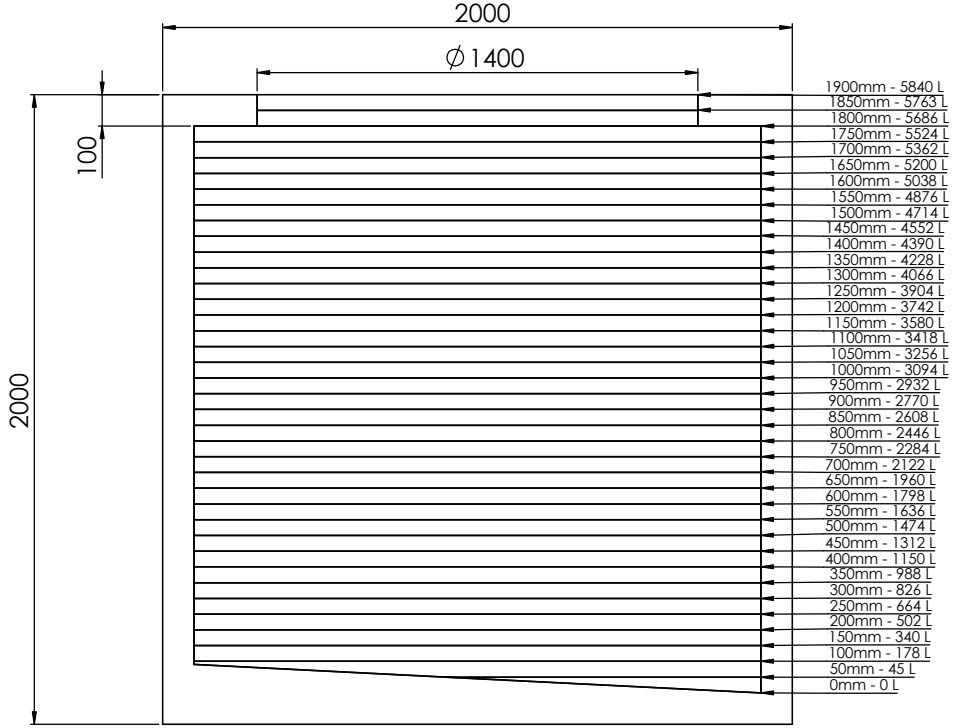
2000
∅1400
100
2000
1900mm - 5840 L
1850mm - 5763 L
1800mm - 5686 L
1750mm - 5524 L
1700mm - 5362 L
1650mm - 5200 L
1600mm - 5038 L
1550mm - 4876 L
1500mm - 4714 L
1450mm - 4552 L
1400mm - 4390 L
1350mm - 4228 L
1300mm - 4066 L
1250mm - 3904 L
1200mm - 3742 L
1150mm - 3580 L
1100mm - 3418 L
1050mm - 3256 L
1000mm - 3094 L
950mm - 2932 L
900mm - 2770 L
850mm - 2608 L
800mm - 2446 L
750mm - 2284 L
700mm - 2122 L
650mm - 1960 L
600mm - 1798 L
550mm - 1636 L
500mm - 1474 L
450mm - 1312 L
400mm - 1150 L
350mm - 988 L
300mm - 826 L
250mm - 664 L
200mm - 502 L
150mm - 340 L
100mm - 178 L
50mm - 45 L
0mm - 0 L

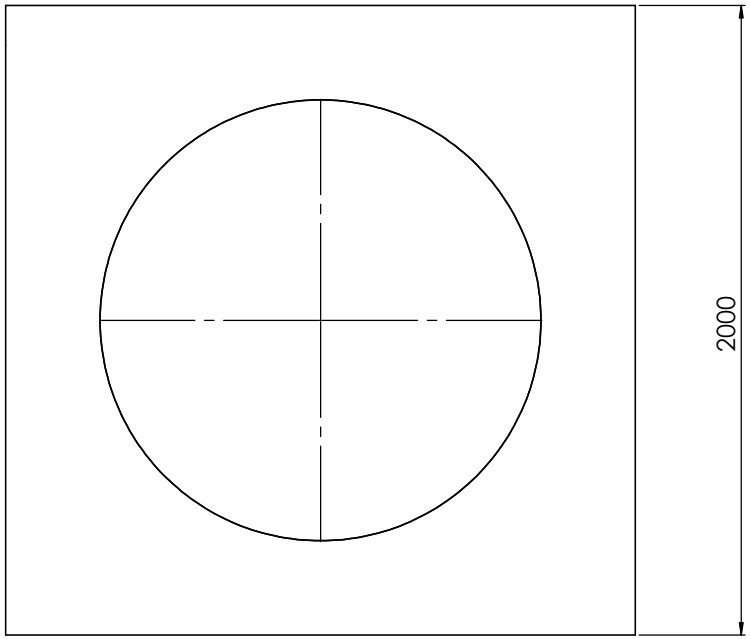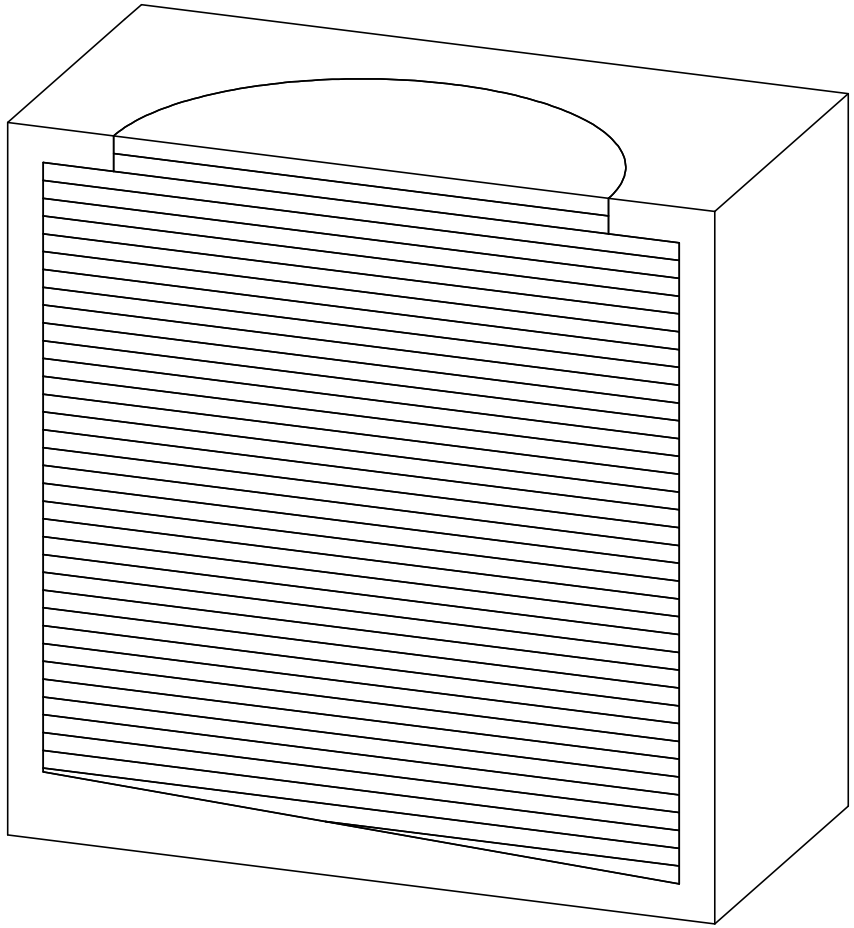
2000